Jinchang Electron Global Service

LTE Antenna

JCG150L

DIMENSIONS

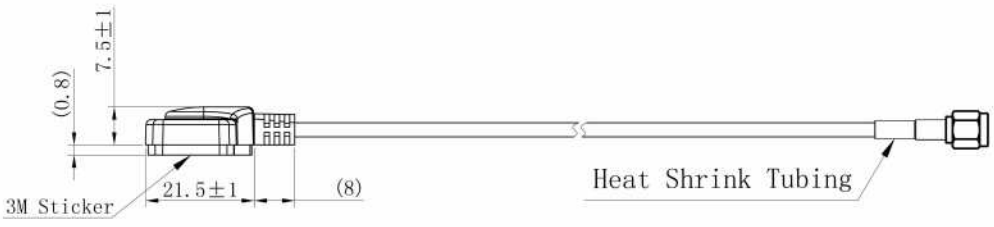

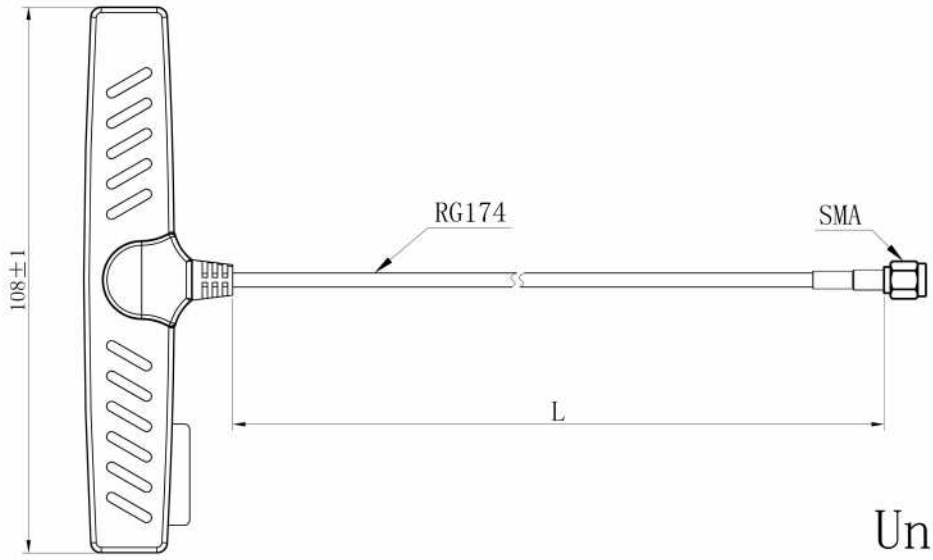

Unit:mm

Zhejiang JC Antenna Co., Ltd.
Address: 398#, Zhenye Road, South Street, Jiaxing, Zhejiang, China
www.jinchanggps.com

Contact: Dora Soong
Email&Skype: sale2@jinchanggps.com
Mobile: +86 18405863271

Jinchang Electron Global Service

SPECIFICATIONS

Item		Specifications
Antenna	Frequency Range	698~960/1710~2690MHz
	Polarization	Linear
	Gain	2.0dBi（Zenith）
	V.S.W.R	＜3.0
	Impedance	50Ω
Mechanical	Cable	RG174
	Connector	SMA or others
	Radome Material	ABS
	Mounting Method	Adhesive
Environmental	Operating Temperature	-40℃~+85℃
	Relative Humidity	Up to 95%
	Ingress Protection	IP67
	Vibration	10 to 55Hz with 1.5mm amplitude 2hours
	Environmentally Friendly	ROHS Compliant

Radiation Pattern

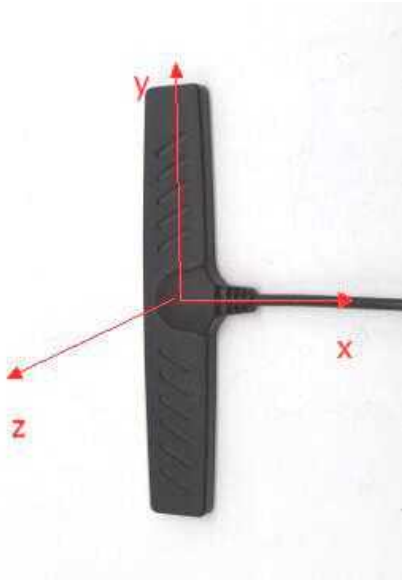

Zhejiang JC Antenna Co., Ltd.
Address: 398#, Zhenye Road, South Street, Jiaxing, Zhejiang, China
www.jinchanggps.com

Contact: Dora Soong
Email&Skype: sale2@jinchanggps.com
Mobile: +86 18405863271

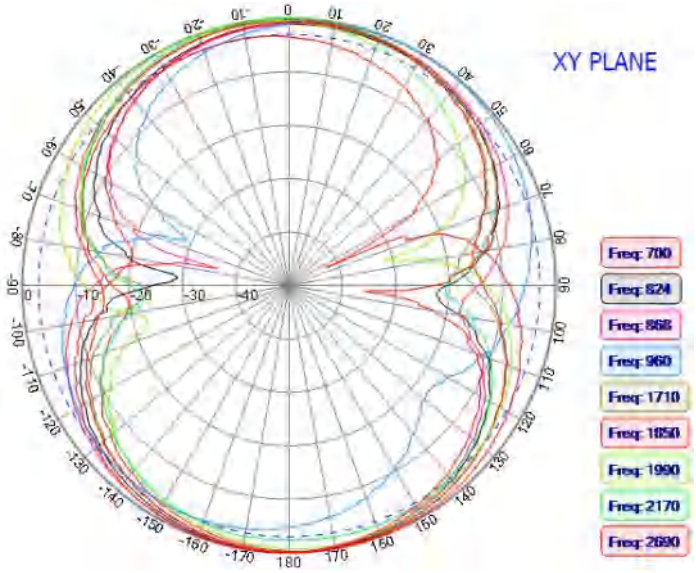

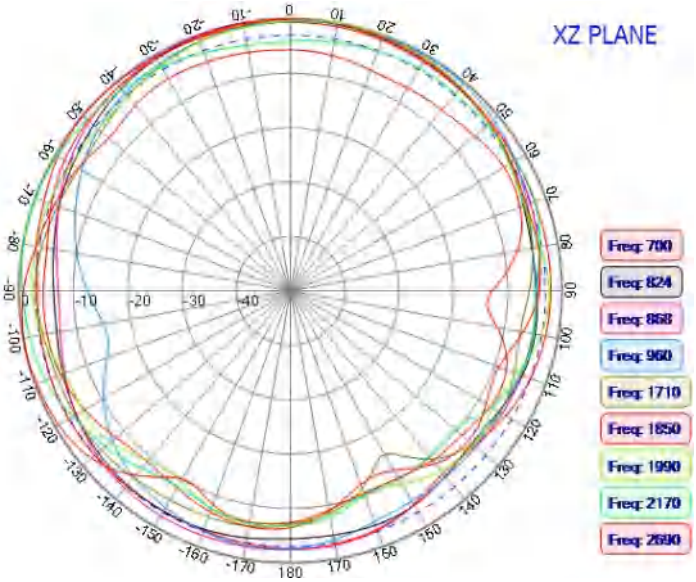

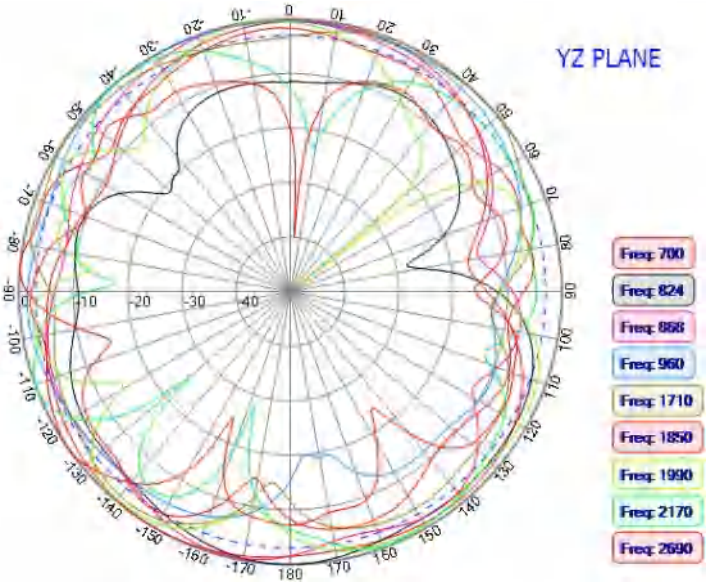

Zhejiang JC Antenna Co., Ltd.
Address: 398#, Zhenye Road, South Street, Jiaxing, Zhejiang, China
www.jinchanggps.com

Contact: Dora Soong
Email&Skype: sale2@jinchanggps.com
Mobile: +86 18405863271