武汉中原长江科技发展有限公司

（国营第七五二厂）

圆柱形锂离子电芯规格书

SPECIFICATION OF PRODUCT

Cylindrical Lithium-ion Rechargeable Cell

电池型号：ICR18650-34MP

Model：ICR18650-34MP

实施日期：2021.05.31

Document No. 文件编号	Q/VG.1.362-2021		**Date** 实施日期	2021-05-31	
Originator 编制		**Checked By** 审核		**Approved By** 批准	
Customer confirmation 客户确认					

Tel 电话：+86-27-84732116

Fax 传真：+86-27-84732116

Http: //www.100752.com

Email：Sunmoon_Battery@hotmail.com

地址：湖北省武汉市汉南区兴三路 231 号（武汉中原长江科技园）

目录

1 Scope 适用范围 1
2 Description and model 说明及型号 1
3 Nominal Specifications 基本规格参数 1
4 Appearance 外观 3
5 Standard Test Conditions 标准测试条件 3
6 Environmental Safety characteristics 环境安全性能 3
7 Safety characteristics 安全性能 6
8 Warranty 产品责任书 6
9 Warning 注意事项 6
10 Declaration 声明 7
Attached drawing 1 Outline Dimensions 8
附图 1：规格尺寸外形图 8

1 Scope 适用范围

This specification describes the type and size, performance, technical characteristics, warning and caution of the lithium ion rechargeable cell. The specification only applies to ICR18650-34MP cell supplied by Wuhan Zhongyuan Changjiang Technology Co.Ltd.

本规格书规定了武汉中原长江科技发展有限公司生产的型号为 ICR18650-34MP 锂离子二次电芯的技术要求和测试方法及注意事项。

2 Description and model 说明及型号

2.1 Description 产品名称：Cylindrical Li-ion rechargeable cell 圆柱锂离子二次电芯

2.2 Model 电芯型号：ICR18650-34MP

3 Nominal Specifications 基本规格参数

Table 1 表 1

Item 项目	Specification 标准	Remark 备注
Model 型号	ICR18650-34MP	
Rated Capacity 标称容量	3350mAh	After standard charging, then at 0.2C_5 discharge to 2.5V, 25℃ 标准充电后，25℃0.2C_5 放电至 2.5V
Min Capacity 最低容量	3250mAh	
Platform Voltage 平台电压	3.60V	
Standard Charging 标准充电	CC-CV, Std.0.2C_5, 4.2V, cut-off at 1/50C_5,8.0hrs 25℃±2℃ 0.2 C_5 恒流恒压充电至 4.2V，截止电流 1/50C5，充电时间不大于 8 小时	C_5, nominal capacity C_5为 5 小时率额定容量
Charging Current (Max.) 最大充电电流	0℃~10℃ 0.2C_5 10℃~45℃ 0.5C_5	
Standard Discharging 标准放电	CC,0.2C5，cut-off at 2.5V 0.2C_5 恒流放电至 2.5V	
Discharging Current(Max.) 最大放电电流	1C_5（Continuous discharge 持续放电） 3C_5（Pulse discharge 脉冲放电）	25℃
AC Impedance 交流阻抗	≤45mΩ	AC 1kHz 交流频率 1kHz
Cycle Life 循环寿命	500th cycle>80% of 1st Cycle Capacity 500 次循环后放电容量>80%首次放电容量	25℃,0.5C_5 charge, 1/20C_5 cutoff; Discharge:1.0C5 to 2.5V 0.5C_5 充电，恒压 1/20C5 截止，1C_5 放电至 2.5V

Item 项目	Specification 标准	Remark 备注
Discharge Characteristics (by rate of discharge) 倍率放电性能	0.2 C_5 ＝100% 0.5 C_5 ≥96% 1.0 C_5 ≥95% 2.0 C_5 ≥93% 3.0 C_5 ≥90%	Cells are to be charged per standard charge profile. The discharge capacity of each cell at respective discharge rate shall be compared with the discharge capacity at 0.2C_5 标准充电后按不同倍率放电容量同 0.2C_5放电容量的百分比
Discharge Characteristics (by temperature) 不同温度放电性能	60℃ ≥100% 45℃ ≥100% 25℃＝100% 0℃ ≥80% -10℃≥75% -20℃≥70%	Discharge: CC 0.2C_5, 2. 5V cut-off at each temperature 0.2C5 恒流放电至 2. 5V
Capacity retention performance at room temperature 室温荷电保持性能	Residual capacity≥85% Recoverable capacity≥90% 容量保持率≥额定容量的 85% 容量恢复率≥额定容量的 90%	25℃,100%SOC, residual and recoverable capacity will be tested after 28 days at 25℃±2℃ 满电态 25℃放置 28 天，在 25℃±2℃下测量容量保持率和容量恢复率
Storage Characteristics 存储性能	Recoverable capacity≥80% 容量恢复率≥额定容量的 80%	25℃, Reletive humidity45%-75%, 40%-50% SOC, residual and recoverable capacity will be tested after 12 months , charge and discharge 5 times. 电池储存前应按标准规定的制式 给电池充入 40%～50%的容量，然后在环境温度 25℃±5℃，相对湿度 45%～75%的环境中储存 12个月。储存期满后，电池按标准规定充放电 5 次
Temperature 使用温度	Charge 充电：0 to +45℃ Discharge 放电：-20 to +60℃	
Storage Temperature 存储温度	1 month 1 个月：-5 to 45℃ 3 months 3 个月：-5 to 35℃ 12 months 12 个月：-5 to 30℃	Recommend storage temperature -5~35℃ 建议存储温度-5~35℃
Storage Humidity 存储湿度	≤75%RH	
Weight 重量	≤49g	
Dimensions (Max.) **（D×H）mm** 最大外形尺寸	18.50×65.20	Refer to the attached drawing 1 参见附件图 1

4 Appearance 外观

There shall be no such defect as deep scratch, flaw, crack, rust, leakage, which may adversely affect commercial value of the cell.

电芯外观不得有变形及裂纹，表面应平整、干燥、无外伤、无污物等，且标志清晰、正确。

5 Standard Test Conditions 标准测试条件

Environmental Conditions 环境测试条件

Unless otherwise specified, all tests stated in this specification are conducted at temperature 25±2℃ and relatively humidity 15~95% and atmosphere pressure 86~106KPa.

若无特别要求，此规格书上的产品测试条件均为温度 25±2℃，湿度 15~95%RH，大气气压 86~106KPa。

Measurement Apparatus 测试设备要求

⑴Ammeter and Voltmeter 伏特计和安培表

The ammeter and voltmeter shall be specified in equal or more precision scale of 0.5class.

安培表和伏特计的精度不低于 0.5 级

⑵Dimension、Time and Weight Measuring Instrument 尺寸，时间和重量测量设备

The dimension, time and weight measurement shall be implemented by instrument with equal or more precision scale of ±0.1%.

测量尺寸、时间和重量的仪器精度范围±0.1%。

⑶Temperature Measuring Instrument 温度测量设备

The temperature measurement shall be implemented by instrument with equal or more precision scale of ±0.5℃.

测量温度的仪器精度范围±0.5℃。

⑷Impedance Meter 内阻测试仪

The impedance shall be measured by a sinusoidal altermating current method (AC 1kHzLCR)

内阻测试仪的测试方法为交流阻抗法（AC 1kHz LCR）

6 Environmental Safety characteristics 环境安全性能

Item 测试项目	Testing Procedure 测试方法	Requirements 检验标准
Free Drop 自由跌落	After standard charge, the cell is to be dropped onto the concrete slab from 1m height at each of anode, cathode 1 time and a cylinder 2 times, a total of 4 times drop test. 电池端子向下从 1m 高度处自由跌落到混凝土板上，正负极端子面各跌落一次，圆柱面跌落两次，共计进行四次跌落试验	No fire，no explosion 不起火，不爆炸

Low Pressure 低气压	After standard charge, cell is to be placed in the vacuum oven with a temperature of 25±5℃. The inner pressure will be decreased to less than 11.6KPa and keep 6hrs. 电芯按标准充电制式充电后，将其搁置在温度为 25±5℃的真空箱中，真空箱密闭后，逐渐减少其内部压力至低于 11.6 KPa（模拟海拔 15240 米）并保持 6h。	No fire，no explosion and no leakage 不起火，不爆炸，不漏液
Crush 挤压	After standard charge, cell is to be crushed with its longitudinal axis parallel to two flat surfaces. The force between the two flat surfaces is 13.0KN±0.78KN. The test will be continued until the maximum force is achieved. And during the test, the cell cannot be short-circuited. 电池按规定制式充满电后，将其置于两个平面内，垂直于极板方向进行挤压，两平板间施加 13.0KN±0.78KN 的压力，当压力达到最大值时即可停止试验，试验过程中电池不能发 生外部短路。	No fire and no explosion 不起火、不爆炸
Vibration 振动测试	After standard charge, the cell is to be attached to a vibration table and tested under the following conditions： The Sine Wane is applied to the vibration test. The testing frequency is from 7Hz to 200Hz, then returns to 7Hz with a total sweeping timeof15 min by the logarithm scanning method. The logarithm scanning method: 7 Hz~8Hz with the acceleration of 9.8m/s^2, keep amplitude of 0.8mm to the acceleration of 78.4m/s^2(50Hz), and then keep the acceleration of 78.4 m/s^2 to 200Hz frequency. Direction：the cell is to be tested in three mutually perpendicular to X/Y/Z axis for total 3h, every direction repeat 12 times. 电芯按标准充电制式充电结束后，将电池固定在振动台上，不可使电池变形，采用正弦波进行振动，并以对数扫频方式在 15min 内从 7Hz 扫频到 200Hz 并返回到 7Hz，振动沿样品互相垂直的 3 个方向（其中一个方向必须与样品正负极所在平面垂直）进行，每个方向按上述扫频方式重复 12 次，振动 3h。 对数扫频方式如下：7Hz～18Hz 保持 9.8m/s^{2}的峰值加速度，将振幅保持在 0.8mm（位移为 1.6mm）直至峰值加速度到 78.4m/s^2（频率约为 50Hz），保持 78.4m/s^{2}的峰值加速度直到频率增长到 200Hz。	No fire，no explosion and no leakage 不起火，不爆炸，不漏液

<table>
<tr>
<td>Temperature cycling
温度循环</td>
<td>After standard charge, cell is to be placed in the constant temperature oven. The inner temperature of oven should be set up as the following table and testing will be repeated 10 times.
电芯按标准充电制式充电后，在室温下稳定后放入温度箱中，温度箱温度按照下表进行调节，循环次数 10 次。
<table>
<tr><td>Temperature
温度（℃）</td><td>Time speed
时间增量（min）</td><td>Total time
累计时间（h）</td></tr>
<tr><td>20±5℃</td><td>0</td><td>0</td></tr>
<tr><td>75±2℃</td><td>30</td><td>6</td></tr>
<tr><td>-40±2℃</td><td>30</td><td>6</td></tr>
<tr><td>75±2℃</td><td>30</td><td>6</td></tr>
</table>
</td>
<td>No fire，no explosion and no leakage 不起火，不爆炸，不 漏液</td>
</tr>
<tr>
<td>Impact
重物冲击</td>
<td>After standard charge, the cell is to be placed on a flat surface. A 15.8±0.2 mm diameter bar is to be placed across the center of the cell. A 9.1±0.1kg hammer is to be dropped on the cell from a height of 610mm±25mm. Keep 6hrs.
电芯按标准充电制式充电后，将电芯置于冲击台面上，将一根 φ15.8mm±0.2mm 的钢柱置放于电芯中心，钢柱的纵轴垂直于电芯的纵轴，让重量 9.1kg±0.1kg 的重锤自 610mm±25mm 高度自由落下，冲击电芯。观察 6 小时。</td>
<td>No fire and no explosion
不起火、不爆炸</td>
</tr>
<tr>
<td>Heating 热滥用
(130℃30Min)</td>
<td>After standard charge, cell is to be heated in a circulating air oven. The temperature of the oven is raised to 130±2 ℃ at the rate of (5±2) ℃ /min and remains for 30 minutes. 电芯按标准充电制式充电结束后，将电芯用绝缘线悬挂在温 度冲击箱（远红外鼓风烘箱或真空烤箱）中，冲击箱温度以（5±2）℃/min 的速率上升到 130℃±2℃，保持 30min。</td>
<td>No fire and no explosion
不起火、不爆炸</td>
</tr>
<tr>
<td>Burning
燃烧</td>
<td>After standard charge, cell is to be fixed on a steel mesh and heated with a flame until the flowing situations occur: ①explosion; ②complete combustion; ③ Continuous burning for 30 min. 电池按标准制式充电后，将其固定在钢丝网上，用火焰加热 电池，当出现以下三种情况时，停止加热电池：①电池爆 炸;②电池完全燃烧;③持续加热 30min，但电池未起火，未 爆炸。</td>
<td>The components of the cell or the cell as a whole cannot penetrate the aluminum mesh
组成电池的部件或电池整体不得穿透铝网</td>
</tr>
<tr>
<td>Acceleration shock
加速度冲击</td>
<td>After standard charge, cell is to be fixed on the impact table and the test is conducted under the half-sine acceleration pulse. At the first 3ms, the minimum average acceleration is 75g_n, the peak acceleration is 150g_n±25g_n and the lasting time is about 6ms±1ms. Every side of the cell should be tested 3 times.
电池按标准充电制式充电后，将其固定在冲击台上，在最初的 3ms 内，最小平均加速度为 75g_n，峰值加速度为 150g_n±25g_n，脉冲持续时间为 6ms±1ms。电池每个方向进行 3 次加速度冲击试验。</td>
<td>No fire, no explosion and no leakage
不起火、不爆炸、不漏液</td>
</tr>
</table>

7 Safety characteristics 安全性能

Item 测试项目	Testing Method 测试方法	Requirements 检验标准
Overcharge 过充（3C/4.6V）	After standard discharge, the cell is to be charged to 4.6V at $3C_5$ current and continues to charge at the voltage until one of the following situations occur: ①the cell temperature is 20% less than the peak temperature；②the test time reaches 7 hours. 电芯按标准放电至截止电压，然后以 $3C_5$ 恒流充电到指定电压 4.6V，转为恒压充电，当出现以下情况之一时终止测试，①电芯的温度比峰值温度低 20%；②总测试时间达到 7h。	No fire, No explosion 不起火、不爆炸
Forced discharge 强制放电	After standard discharge，the cell is to be reverse charged at $1C_5$ for 90min. 电芯按标准放电制式结束后，以 $1C_5$ 的电流反向充电 90min。	No fire, no explosion 不起火、不爆炸
External short circuit 短路	After standard charge, cell is to be short-circuited by connecting the positive and negative terminals under the temperature of 25 ℃ ±5 ℃ and 55 ℃ ±5 ℃ respectively with a resistance load of 80±20mΩ for 10min. The cell is continuously short-circuited until the following situations occur: ① the cell temperature is 20% less than the peak temperature； ②the test time reaches 24 hours. 电芯按标准充电制式充电结束后，在环境温度 25℃±5℃或 55℃±5℃的条件下，于防爆箱内用电阻 80±20mΩ 导线将电芯正负极短接，试验过程中关注温度变化，当出现以下情况时，终止测试：①电芯外壳中心温度比峰值温度低 20%；②总的测试时间达到 24h。	No fire, No explosion and the highest Temperature less than 150℃ 不起火、不爆炸、最 高温度不超过 150℃

8 Warranty 产品责任书

Wuhan Zhongyuan Changjiang Technology Co.Ltd will provide this product a warranty period for 1 year after shipment, even within the warranty period Wuhan Zhongyuan Changjiang Technology Co.Ltd will only be responsible for defect of cells related to manufacturing. Any other problems caused by malfunction of the equipment or incorrect use will not be covered by this warranty.

武汉中原长江科技发展有限公司对此产品提供 1年的保质期，但对于没有按照规格书进行操作所造成的任何意外事故，武汉中原长江科技发展有限公司不承担任何责任。

9 Warning 注意事项

Stop charging the battery if charging isn't completed within the specified time.

在规定时间还没有充满电时停止充电。

Don’t use the unspecified charger or breach charging requirements. Charging cells under unspecified conditions may lead overcharge or abnormal chemical reaction, which cause heat, smoking, rupture or fire.

不要使用非规定充电设备和违反充电要求。非规定条件充电会引发电芯过充电或异常化学反应，发生产热，冒烟，破裂或起火情况。

Don’t expose the cell to direct sunlight (or in car exposed to sunlight) and keep it away from

children, seek immediate medical attention if the cell is swallowed or inhaled.

不要将电芯放置在太阳光直射的地方（或阳光直接照射的车内），电芯要远离儿童放置，如发生吞咽情况，请立即就医。

Don’t expose the cell to extreme hot environment and don’t dispose it in fire or water. It will be dangerous to modify or disassemble the cell which may cause fire, heating, leakage or explosion.

切勿将电芯加热或投入火中或水中。不要更改或解剖电芯。否则会导致危险，如起火、发热、泄露和爆炸。

Don’t short-circuit cell positive(+) and negative(-) terminals and keep the cell away from metal or other conductive materials. Don’t reverse the positive (+) and negative (-) terminals.

切勿短接电芯正极(+)和负极(−)，使电池远离金属和其他导电材料。切勿反接电芯正极(+)和负极(−)。

Remove the cell from the device or cell charger and stop using it immediately once abnormal situation such as heating, gas generating, discoloration or deformation occurred.

当电芯在使用、充电及储存时发生放气、发热、变色或其他不正常现象，立即从夹具或充电器卸除，电芯停止使用。

Don’t weld the cell directly. Excessive heating may cause deformation of the cell components such as the gasket which may lead swelling, leakage, fire or explosion.

勿直接焊接电芯，过多的热量会导致电芯组件如绝缘件变形，进而导致电芯鼓胀、泄露、起火和爆炸。

Don’t use the cell which has been damaged by shipping stress, drop, short-circuit or has an electrolyte smell.

切勿使用在运输压力、跌落、短路或其他情况下损坏的电芯以及释放出电解液气味的电芯。

10 Declaration 声明

If you have any questions about this specification of product, please contact us. Wuhan Zhongyuan Changjiang Technology Co., Ltd reserves the right to modify this specification of product.

若对本产品规格书有疑问，请与武汉中原长江科技发展有限公司联系。武汉中原长江科技发展有限公司保留对本产品规格书更改的权利。

Attached drawing 1 Outline Dimensions
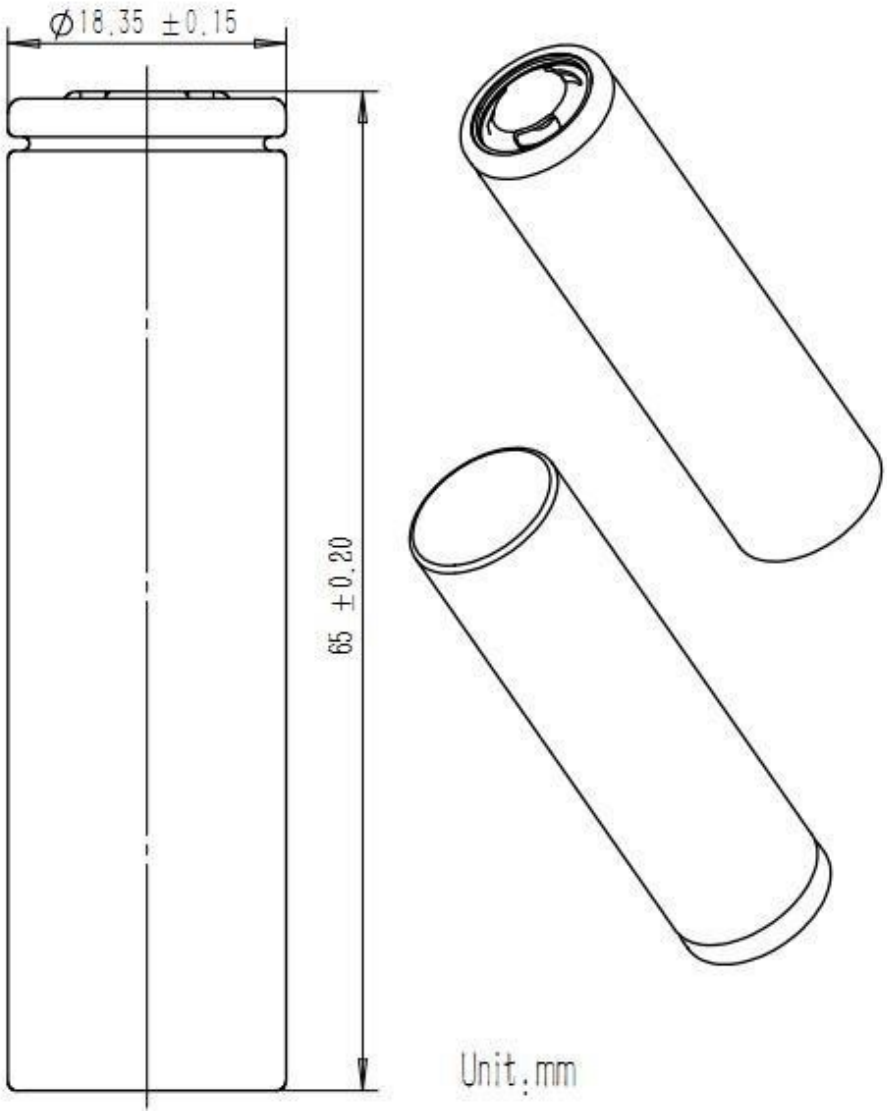
附图 1：规格尺寸外形图