FOR-1754 Rev.1.1

| 未注公差/General tolerances(mm) | | | | | | | | | | | | | | |
|---|---|---|---|---|---|---|---|---|---|---|---|---|---|---|
| 0 ~ 3 | >3 ~ 6 | >6 ~ 10 | >10 ~ 18 | >18 ~ 30 | >30 ~ 50 | >50 ~ 80 | >80 ~ 120 | >120 ~ 180 | >180 ~ 250 | >250 ~ 315 | >315 ~ 400 | >400 ~ 500 | >500 | 0.1/10 |
| ±0.12 | ±0.18 | ±0.22 | ±0.26 | ±0.31 | ±0.37 | ±0.57 | ±0.80 | ±0.93 | ±1.05 | ±1.15 | ±1.60 | ±2.20 | ±2.50 | ±2° |

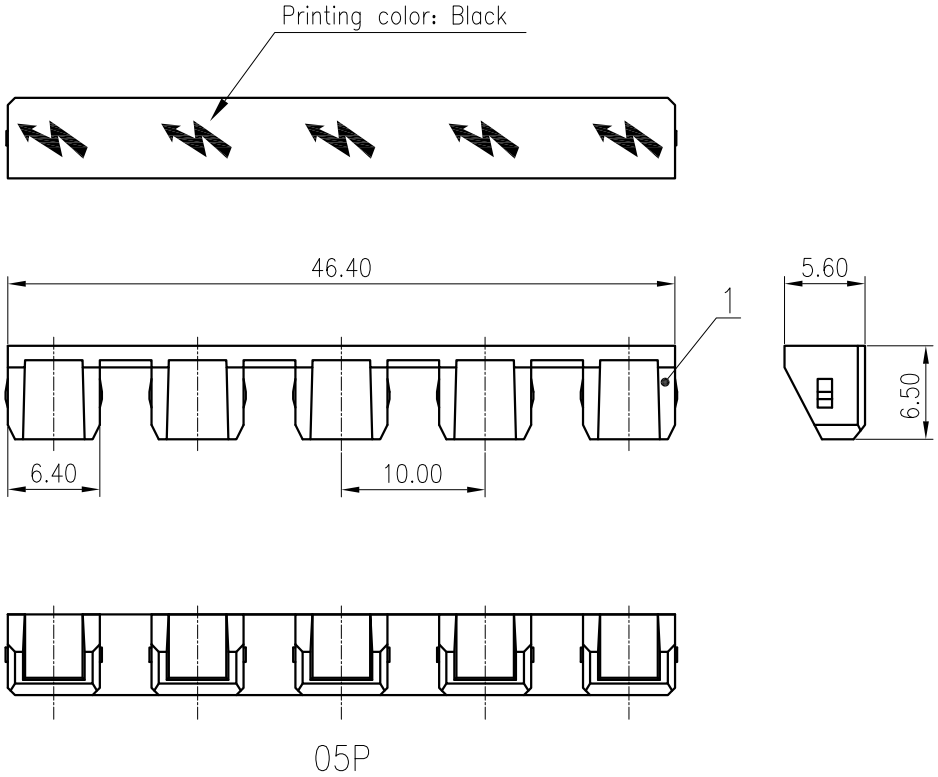


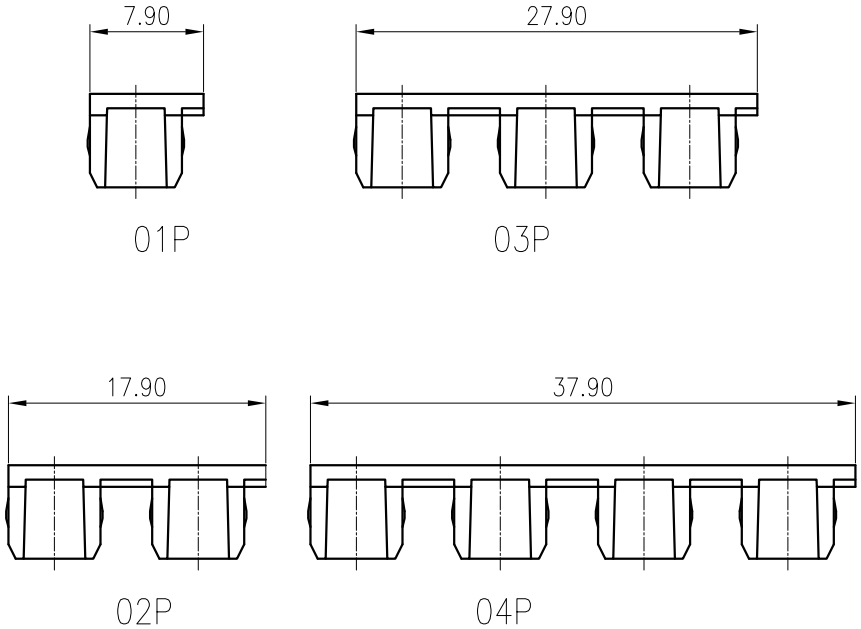


| ITEM | NAME OF PART | MATERIAL | NOTES |
|---|---|---|---|
| 1 | Housing | PA66 | UL94V-0 |

| | |
|---|---|
| 间距/Pitch(mm)/线数范围/Poles | 10.0/01~05P |
| 使用温度范围/Operating temperature(°C) | -40~+105 |
| 符合RoHS环保要求/Conform to RoHS | Yes |

MATERIAL: SURFACE:

MAT NO.: /

STATUS: /

APPD: Li GL 2020.06.06

CHKD: Mao J 2020.06.06

DRFT: Feng X 2020.05.30

DEGSON®

宁波高松电子有限公司
NINGBO DEGSON ELECTRICAL CO., LTD

NAME: EEA10-XXP-1Y-00A(H)

DRAWING NO.: EEA10-C01 REV D0-1

SIZE: A4 mm (inch) TYPE: CUSTOMER DRAWING SCALE: 2:1 SHEET 1/1

| REV | ECN | DESCRIPTION | DRFT | DATE |
|---|---|---|---|---|