FOR-1754 Rev.1.1

未注公差/General tolerances(mm)														
0 ~ 3	>3 ~ 6	>6 ~ 10	>10 ~ 18	>18 ~ 30	>30 ~ 50	>50 ~ 80	>80 ~ 120	>120 ~ 180	>180 ~ 250	>250 ~ 315	>315 ~ 400	>400 ~ 500	>500	D 0.1/10
±0.12	±0.18	±0.22	±0.26	±0.31	±0.37	±0.57	±0.80	±0.93	±1.05	±1.15	±1.60	±2.20	±2.50	∠ ±2°

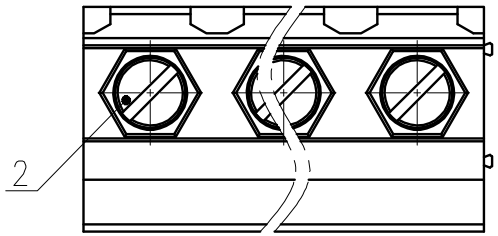

PCB LAYOUT

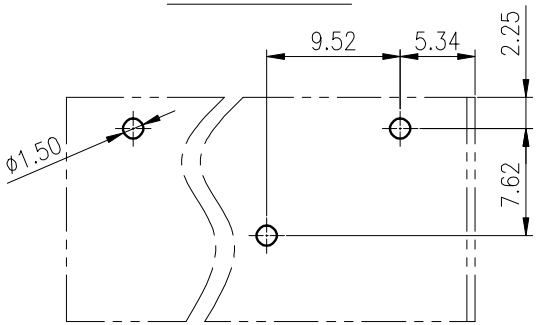

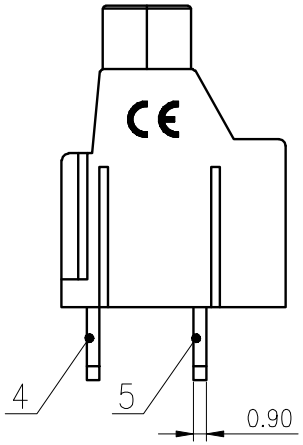

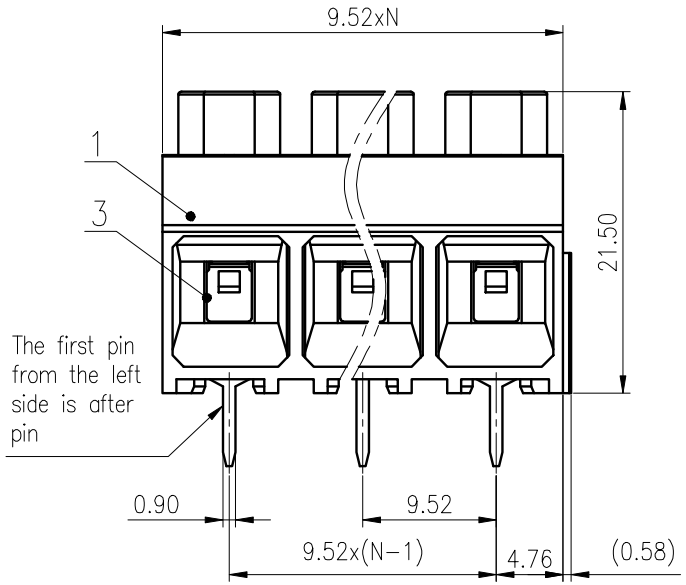

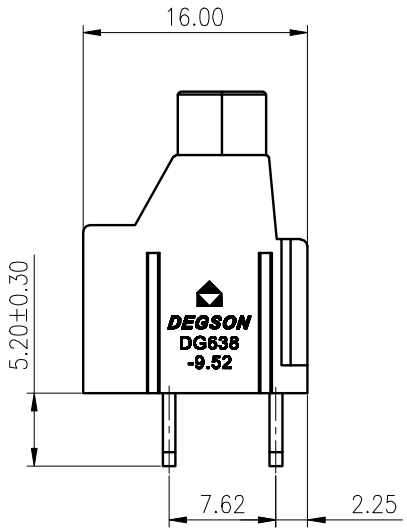

ITEM	NAME OF PART	MATERIAL	NOTES
5	Front pin	Copper	Sn Plated
4	After pin	Copper	Sn Plated
3	Cage	Copper alloy	M3.5/Ni Plated
2	Screw	Steel	M3.5/Zn Plated
1	Housing	PA66	UL94V-0

UL 标准/UL Standard:	B	C	D
额定电压/电流/Rated Voltage(V)/Current(A)	600/30	600/30	/
IEC 标准/IEC Standard:			
过压类别/Overvoltage Category/污染等级/Pollution Degree	Ⅲ/3	Ⅲ/2	Ⅱ/2
额定电压/电流/Rated Voltage(V)/Current(A)	690/32	1000/32	1000/32
额定脉冲电压(KV)/Rate Impulse Voltage(KV)	8	8	6
螺丝扭矩/Torque Tightening(N·m/Lb.in)	M3.5, 0.8/7.02		
线径范围(硬线和软线)/Wire Range(rigid and flexible)(mm^2/AWG)	0.2~4.0/30~10		
间距/Pitch(mm)/线数范围/Poles	9.52/N=2~16P		
剥线长度/Stripping length(mm)	7-8		
使用温度范围/Operating temperature(°C)	-40~+105		
符合RoHS环保要求/Conform to RoHS	Yes		

MATERIAL:	SURFACE:
MAT NO.: /	DEGSON® 宁波高松电子有限公司 NINGBO DEGSON ELECTRICAL CO., LTD
STATUS: /	
APPD: Lan ChH 2020.05.16	NAME: DG638-9.52-DB-XXP-1Y-00A(H)
CHKD: Yu JZh 2020.05.16	
DRFT: Jay.z 2015.06.08	DRAWING NO.: DG638-9.52-C03 REV T1
SIZE: A4 mm (inch)	TYPE: CUSTOMER DRAWING SCALE: 2:1 SHEET 1/1

REV	ECN	DESCRIPTION	DRFT	DATE